DESIGN AND FABRICATION OF HEALTH MONITORING SMART SHIRT

TEAM MEMBERS:

DEEPAK .S

SRINIVASAN .K

PROBLEM STATEMENT

- Cardiovascular diseases (CVDs) have become a leading cause of death in India, with a sharp increase in heart attacks and related conditions among both older and younger populations.

- In Tamil Nadu, urban stress, sedentary lifestyles, poor dietary habits, and undetected hypertension or diabetes contribute heavily to this growing crisis. Many patients do not get timely diagnosis due to lack of continuous monitoring or access to immediate medical care.

- There is a strong need for an affordable, non-invasive, wearable solution that can monitor critical heart parameters in real time and alert patients or caregivers before a medical emergency occurs.

ABSTRACT

- This project introduces a Smart Health Monitoring Shirt that integrates non-invasive biosensing technology into wearable clothing for real-time health tracking. The system is designed to measure three key physiological parameters: Electrocardiogram (ECG), Heart Rate (BPM), and Blood Oxygen Saturation (SpO_2).

- The core of the system is built around an Arduino Nano microcontroller, interfaced with an AD8232 ECG sensor for accurate cardiac signal acquisition and a MAX30102 sensor for measuring heart rate and blood oxygen levels through optical sensing. Data from these sensors is processed in real time and transmitted via a Bluetooth module (HC-05/HC-06) to a smartphone or computer for display and analysis.

- Sensor electrodes are integrated into the shirt fabric, allowing for continuous and comfortable monitoring without hindering the user's mobility. The solution is compact, low-power, and suitable for applications such as fitness tracking, remote patient monitoring, and proactive health diagnostics.

- This smart shirt offers an innovative and cost-effective approach to wearable health monitoring systems.

Components Used

MAX30102 Sensor

An optical sensor that uses red and infrared LEDs to measure heart rate and blood oxygen levels (SpO_2). It's compact and ideal for wearable health devices.

Arduino nano

Arduino is a popular microcontroller platform that's super beginner-friendly. It includes both hardware (the board) and software (Arduino IDE) to write and upload code

Battery

A li-po battery is a lightweight, rechargeable battery that provides portable power for electronic devices.

AD8232 Sensor

An analog front-end module used to extract, amplify, and filter the electrical signals of the heart (ECG). It helps measure the heart's electrical activity with high accuracy

HC-05 module

Used to wirelessly transmit the sensor data from the Arduino Nano to a smartphone or computer for real-time monitoring and visualization.

TP4056 module

The TP4056 module is primarily used as a lithium-ion battery charger, specifically for single-cell batteries. It is a compact and simple solution for charging Li-ion batteries.

Working Principle

1. ECG Monitoring

Electrodes stitched into the shirt come in direct contact with the user's skin and capture the heart's electrical activity. The AD8232 ECG sensor amplifies and filters this signal and sends it to the Arduino Nano.

2. Heart Rate and SpO_2 Measurement

The MAX30102 sensor, typically placed on the fingertip or wrist area, uses light-based technology to measure the user's heart rate (BPM) and blood oxygen saturation (SpO_2). It transmits this data to the Arduino Nano.

3. Signal Processing

The Arduino Nano receives analog and digital signals from both sensors. It processes the data to extract meaningful health parameters such as ECG waveform, BPM, and SpO_2 percentage.

4. Wireless Communication

Processed data is sent via a Bluetooth module (HC-05/HC-06) to a smartphone or PC application.

5. Display & Monitoring

On the mobile app or PC interface, users can view real-time graphs and values of their heart health parameters. Alerts can be generated if any readings are abnormal.

6. Power Supply

The system is powered by a small LiPo battery, making the entire setup compact, wearable, and portable.

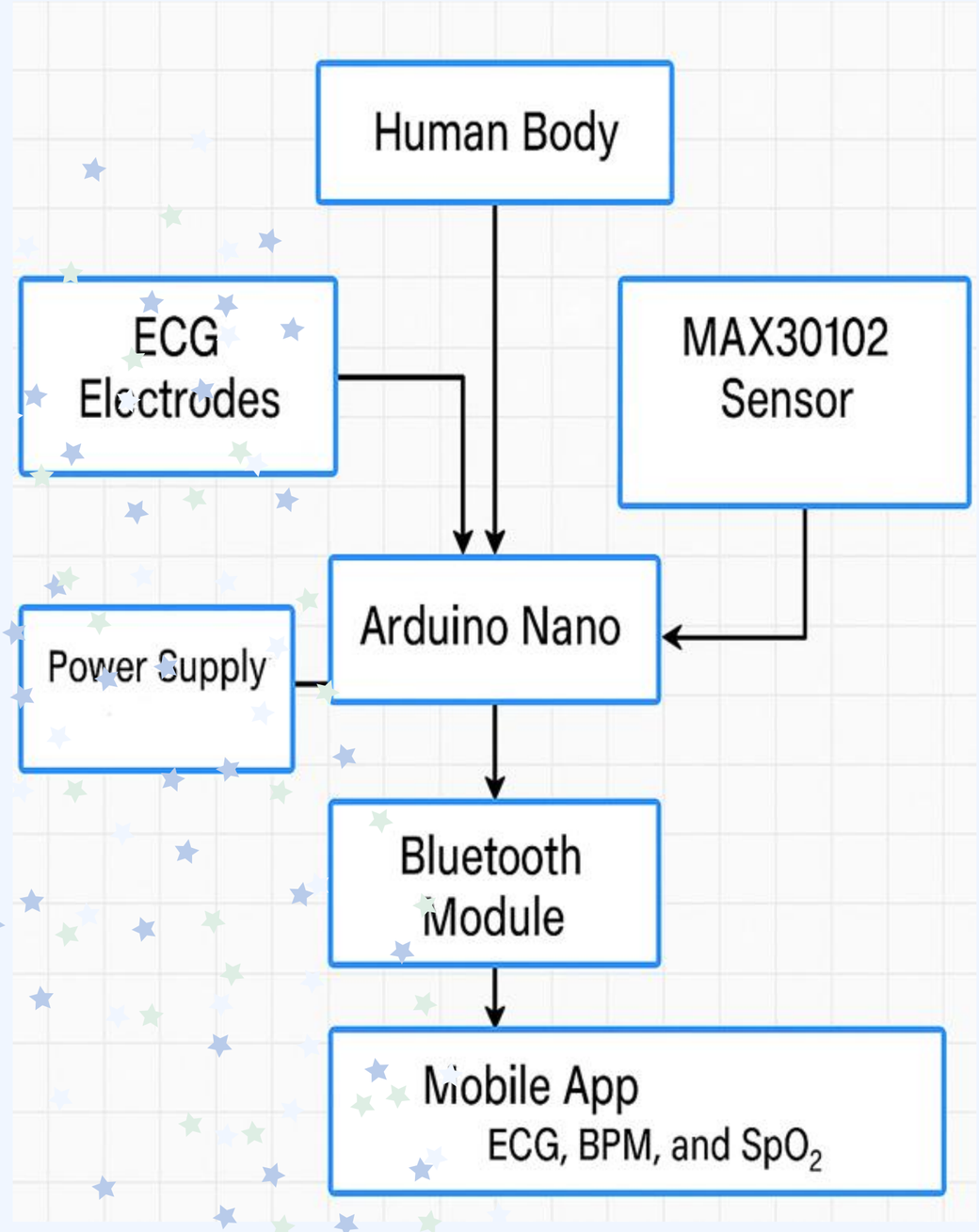

Advantages & Uniqueness

- Continuously tracks ECG, heart rate (BPM), and blood oxygen (SpO_2) using integrated sensors.
- Embedded in a comfortable shirt with Bluetooth connectivity for easy, on-the-go health tracking.
- Ideal for remote patient care, elderly monitoring, athletic training, and personal wellness.

Conclusion

The Smart Shirt project provides a wearable, low-cost solution for monitoring ECG, heart rate, and SpO_2 in real time. Using Arduino and Bluetooth technology, it offers wireless health tracking suitable for personal use and remote monitoring. Though basic, it lays a strong foundation for future health tech innovations.

Thank you